ACCESS CONTROL
D.A.C.E
PRODUCTS

LAZER

GARAGE DOOR OPERATORS

WITH

LASER PARK ASSIST

INSTRUCTIONS & OWNERS MANUAL

SECTIONAL
VERTICAL ROLL-UP
TIP-UP

INDEX

PREPARATION BEFORE INSTALLATION

Congratulations on choosing the *LAZER* garage door operator. DA.C.E are leaders in the automation field and are continuously striving to find improved ways to make life easier and safer by using the latest technology available.
We pride ourselves in manufacturing a high quality product that will give many years of trouble free operation. To ensure the correct function of the product, it is very important that the instructions in this manual are followed. It is strongly recommended that an experienced installer is used to install the equipment. To avoid electrical shock, a qualified electrician should be used to install the electrical cabling for this equipment.

READ THIS MANUAL CAREFULLY BEFORE ANY INSTALLATION BEGINS

CAUTION!

This garage door operator uses high voltage.
DANGER OF ELECTRICAL SHOCK, ENTRAPMENT AND CRUSHING.

The following points must be checked when installing and operating this equipment:

- Ensure that the door is in good working order ***before*** the motor is installed. The door should be able to be operated manually using one hand only. The force required to move the door by hand must be the same in both the open and the close direction. If the door is not in perfect working order, a qualified door technician must be used to repair any door defect ***before*** the operator is installed. Failure to do this will lead to malfunction of the operator. This can be extremely dangerous. DO NOT ATTEMPT TO REPAIR THE DOOR UNLESS QUALIFIED TO DO SO.
- ***Never*** install this equipment outdoors, including carports etc
- ***Never*** open or work on equipment while it is still connected to the power supply.
- ***Never*** assume that the power supply is turned off. The battery backup system keeps the motor active even with the mains power turned off.
- ***Never*** allow children to play with or near garage doors & the automation equipment.
- ***Ensure*** that the wall console is mounted out of the reach of children.
- ***Never*** operate the door while out of sight of the door.
- ***Do not*** allow children to play with any remote control device
- ***Use extreme caution*** when operating the manual release, as the door may move causing injury or damage.
- Examine the door ***every six months*** for spring tension and ensure that the door is running in the correct manner. The obstacle sensing system must be tested at the same time.
- ***Never*** use auto close facility without the use of infrared safety beams.
- This operator is specifically designed to be used on ***domestic Sectional , Roll-up*** and ***Tip-up*** type garage doors only.
- Install the manual release cord out of the reach of children.

***NOTE** : A garage door should **not** be automated until it is in good working order. A garage door is a large and heavy piece of equipment and this must be considered when the door is automated. Due to this fact, the motor used on this equipment is extremely powerful and may cause injury or damage if installed or operated incorrectly. It should be noted that, in certain countries, it is mandatory that all automated doors be fitted with infrared safety beams. The manufacturers cannot be held responsible in ANY way in the event of injury , death or damage as a result of the incorrect installation or operation of this equipment.*

TERMS AND DEFINITIONS

- **Auto Close** (optional)**:** allows the garage door to close after a selected period of time.
- **Infrared Safety Beams** (optional)**:** electronic devices that will stop the door closing if an object is detected in the path of the door.
- **PC Board / Control Card:** control board that contains all the electronic components to operate the garage door motor.
- **Obstacle sensing:** if the door hits an obstruction or senses excessive force while closing, the motor will stop and re-open.
- **Remote Control:** a radio frequency device, usually hand held, that is used to activate the operator .
- **Wall Console** (optional)**:** a wall mounted remote control.
- **Onboard Receiver:** receiver built onto the main PC board that receives the signal from the remote control to trigger the operator.
- **Courtesy Light:** built in light on the power head that illuminates when the operator has received a trigger.
- **Physical End Stoppers:** adjustable stoppers that limit the door travel distance in order to protect the door from damage.
- **Ramp Down:** the slowing down of the door at the end of its travel.
- **Manual Release Mechanism:** used to over ride the operator to allow for the manual operation by pulling the Manual release cord.
- **Battery backup** (optional)**:** a facility which enables the battery system to take over power supply to the operator if there is a loss of power being supplied from the mains power supply
- **Select Button:** selects the desired operation.
- **Enter button:** multiple function button.
- **Lockout:** electronically locks the door in any chosen position.
- **Drive Channel:** length of steel track that houses the chain and the carriage.
- **Carriage:** block that moves inside the drive channel that is attached to the chain.
- **Straight Arm:** section of flat steel connected to the carriage. (Sectional door)
- **Bent arm:** section of flat steel connected to the door and the straight arm. (Sectional door)
- **Laser Module** (optional)**:** emits a pin point light to assist with precision parking.
- **LCD Screen:** shows digital messages regarding the operation of the motor.

PARTS

Power Head

U Bracket

Manual Release Mechanism

M6 Bolts and nuts

Manual Release Cord

Door Bracket

Coach screws

Clevis pins

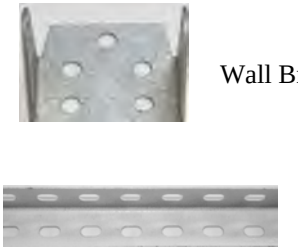

Wall Bracket

Short slotted angle iron bracket x 1

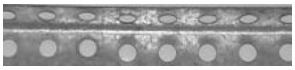

Long punched angle iron x 2

Drive channel

Bent and straight connecting arms

"Z" Battery bracket

Laser

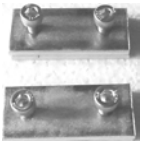

End Stoppers with screws

SECTIONAL DOOR

ATTACHING THE POWER HEAD TO THE DRIVE CHANNEL

1. Insert the Power Head shaft into the drive channel sprocket.

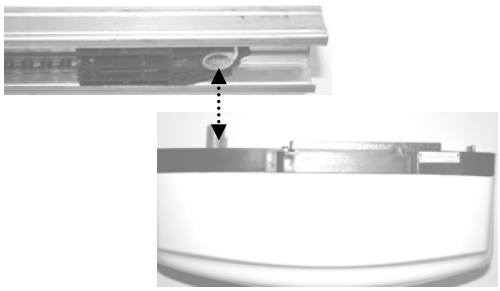

2. Use the M6 bolts supplied to attach the U brackets to the power head.

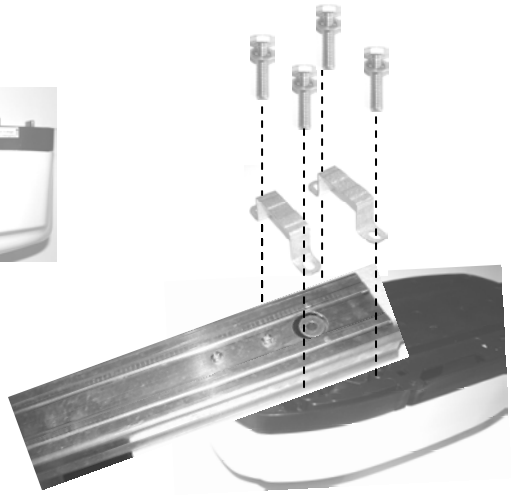

The power head and drive channel is now ready to be mounted on to the wall

NOTE : The power head can be rotated through 180° if necessary. This is normally only done for a vertical roll up installation

MOUNTING THE WALL BRACKET

The driving force from the operator is transferred through the wall bracket, therefore it is vital that the wall bracket be mounted securely.
The wall bracket must be placed a minimum of 20 mm above the highest part of the door travel

1. Use the coach screws and plugs supplied to attach the wall bracket to the wall

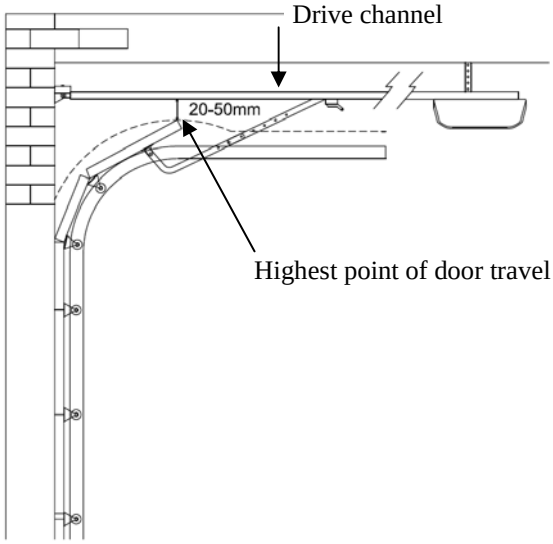

2. Ensure that the wall bracket is mounted above the highest part of the door travel. The clearance between the door and the drive channel should be 20 mm -50 mm.

ATTACHING THE DRIVE CHANNEL TO THE WALL BRACKET

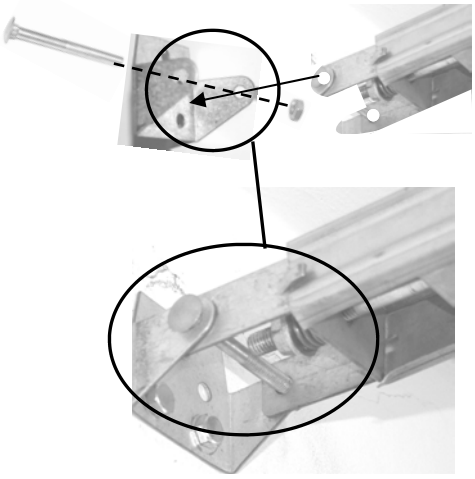

1. Place end of drive channel into the wall bracket.
2. Use bolt and nut supplied to secure the drive channel into the wall bracket.

Drive channel attached to wall bracket.

MOUNTING ANGLE IRON BRACKET TO DRIVE CHANNEL

The drive channel can be attached to either the garage ceiling or to the roof trusses.

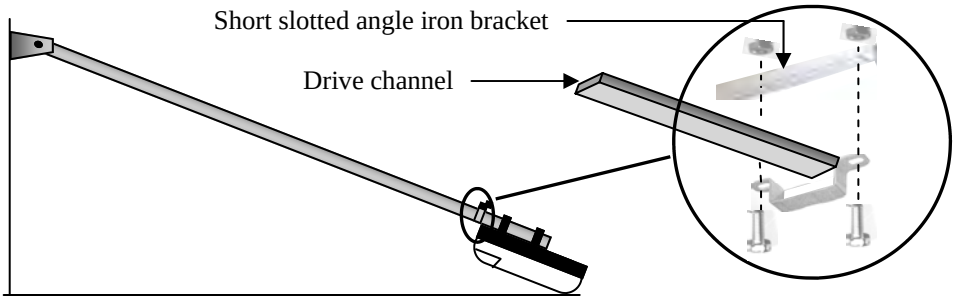

The long sections of punched angle iron must be cut to ***ensure that the drive channel is level*** when attaching it to the ceiling / roof trusses. A cross brace may be used for extra stability.

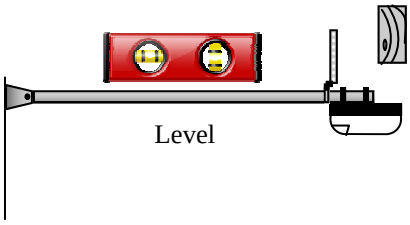

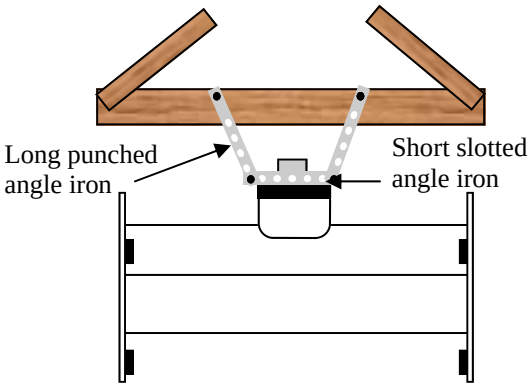

ATTACHING THE MANUAL RELEASE

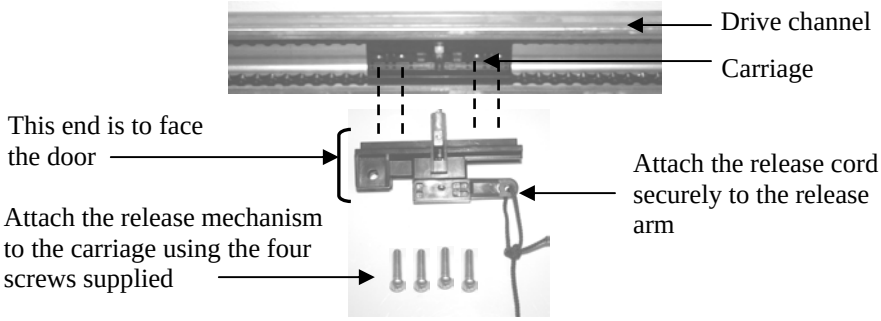

OPERATING THE RELEASE MECHANISM

1. Engaging the release mechanism:

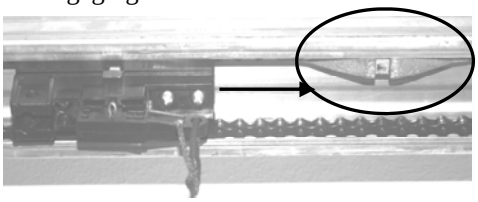

Engage the carriage into the “bullet” by moving the carriage over the bullet until it locks in.

Carriage now engaged in the bullet.

2. Activating manual release:

Activate the manual release by pulling down on the release cord. The door can now be operated manually.

Pull down to release

Important note: *the manual release must be used with extreme care as the door may move uncontrollably after the release is activated. This can cause serious harm or damage. Ensure the door path is clear of any obstacle before operating the manual release. Never allow children to activate the manual release. The release must be positioned in such a way that small children can not reach it, at least 1.8m above ground level*

ATTACHING THE DOOR BRACKET TO THE DOOR

The door bracket is attached to the door using the pop rivets supplied. Ensure that this bracket is secure. If the door bracket comes loose, the door may move uncontrollably. ***This can cause serious injury or damage.***

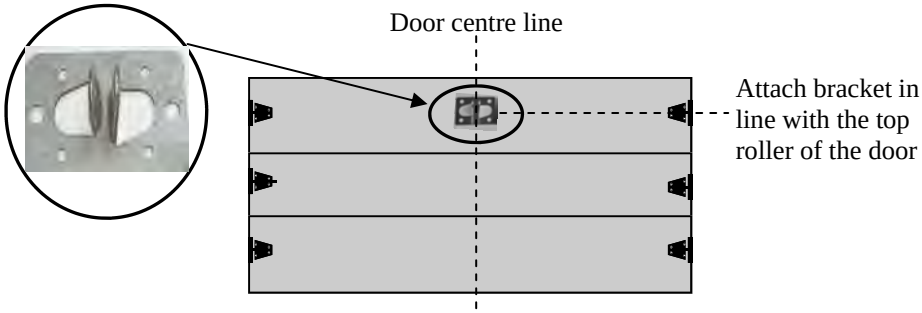

ATTACHING THE ARMS

The door is connected to the release mechanism by the two connecting arms supplied. There is one straight arm and one bent arm. The straight arm is connected to the release mechanism using one set of the clevis and split pins supplied. The bent arm is connected to the door bracket using the other set. The two arms are joined using the two bolts and nuts supplied.

1. Connect bent arm to door bracket:

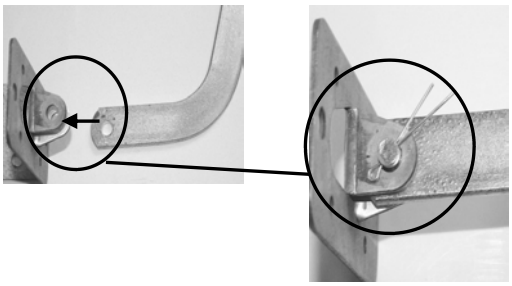

Use clevis and split pin to attach

2. Connect straight arm to release mechanism:

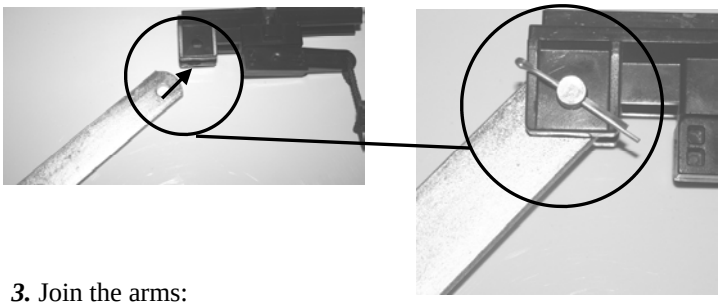

Use clevis and split pin to attach

3. Join the arms:

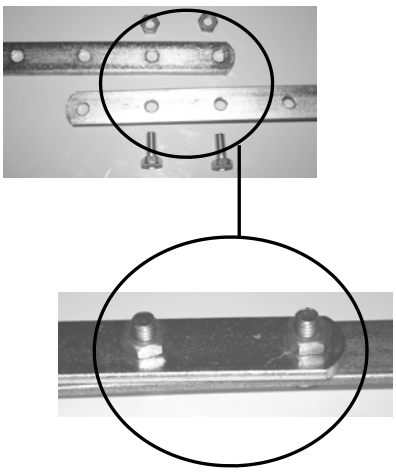

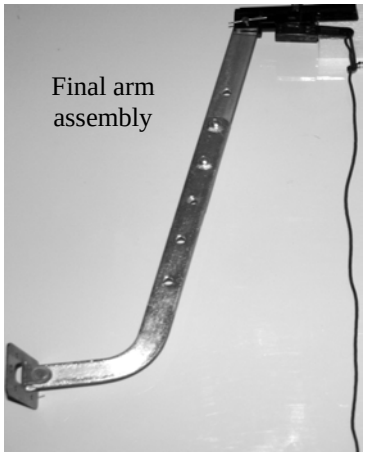

SETTING THE END STOPPERS

This operator has built in memory of the 'door travel' open and closed limits.
*It is, however, **VITAL to set the physical end stoppers** so that, in the event of a failure, the physical end stoppers will stop the door before any damage or injury occurs.*

There are two end stoppers. One for the open & one for the closed position.

Setting the CLOSED End Stopper
Manually close the door to the FULLY closed position.

Move the End Stopper up against the release mechanism and ***TIGHTEN*** the bolt

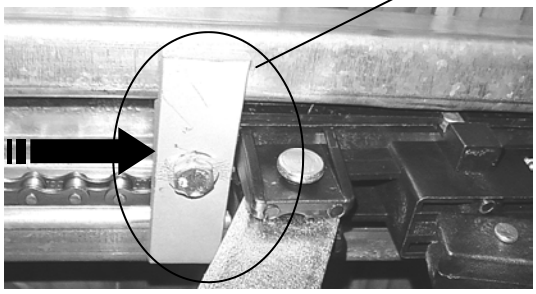

Setting the OPEN End Stopper
Manually open the door to the FULLY open position.

Move the End Stopper up against the release mechanism and ***TIGHTEN*** the bolt

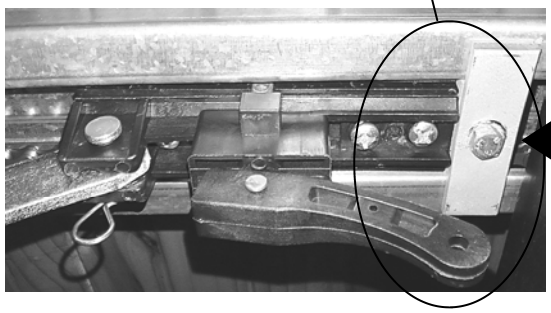

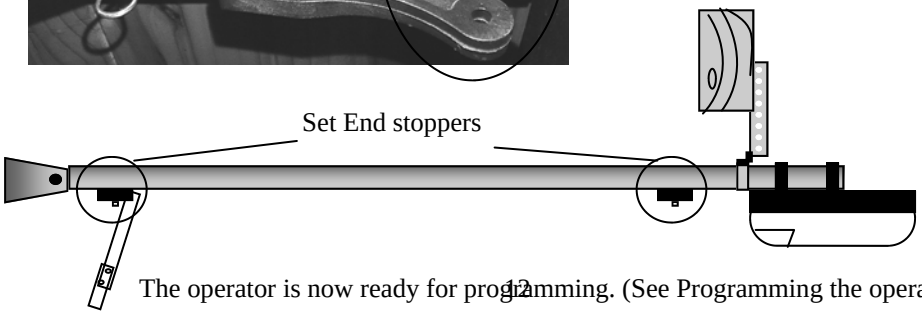

The operator is now ready for programming. (See Programming the operator.)

ROLL—UP DOOR

The *LAZER* garage door operator can be used to operate a Roll-up type door. This is done by using the *ROLL ON* linear roll up bracket. The channel used in this application is mounted vertically beside the door. The *LAZER* operator can also be used to operate a double roll up door. In the case of a double roll up installation, both doors will operate simultaneously.

The operator mounts vertically beside the door.
Note: The operator can be mounted on either the left or the right hand side of the door. In the case of a double door, the operator is mounted in between the two doors.

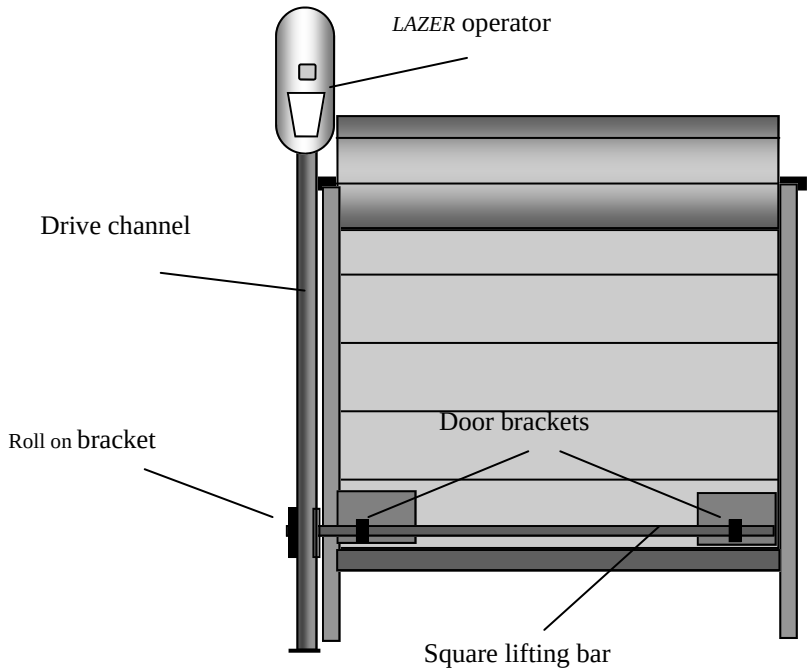

MOUNTING THE POWER HEAD ONTO THE CHANNEL.

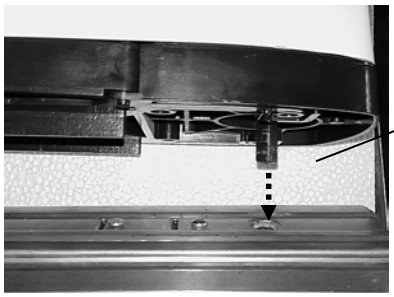

Insert the motor shaft into the square slot in the sprocket.

Attach the power head to the channel by using the U bracket and the wall bracket as shown

U bracket

Wall bracket

MOUNTING THE CHANNEL TO THE WALL

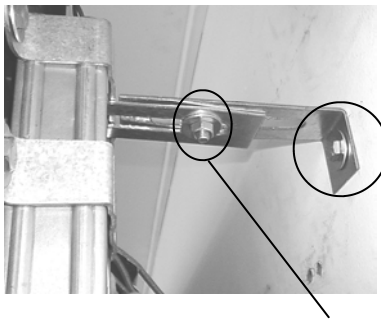

Using the coach screw supplied, attach the wall bracket to the wall.

The adjustment bolt should be loose.
This will be tightened at a later stage.

Do not secure the floor bracket at this stage.

MOUNTING THE LIFTING BAR

The backing plates and the door brackets must be attached to the door

Attach the lifting bar to the roll on bracket.

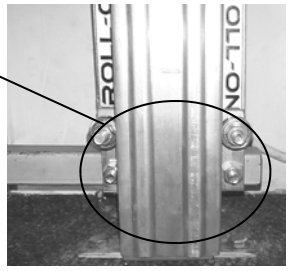

Lower the bracket with the lifting bar in place to the fully closed position.

Ensure that the lifting bar is level .

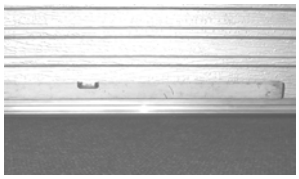

Slide the door brackets onto the lifting bar and place the backing plates in place.
Mark the door where the brackets are to be attached .

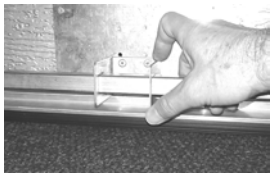

Attach the backing plates and the door brackets to the door using the rivets supplied.
NOTE: Due to limited space, it may be necessary to mount the door brackets with the lifting bar in place.

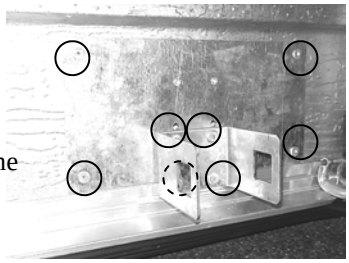

Door with brackets and lifting bar in place

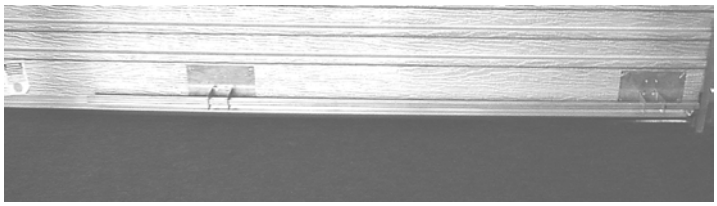

Lift the door to the fully open position.
With the door in the fully open position, tighten the bolt on the wall bracket.

This secures the top of the operator.

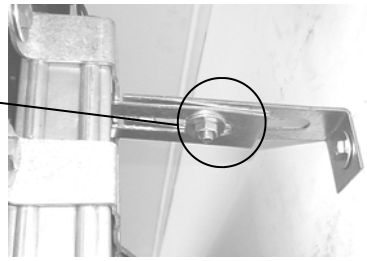

Move the door to the fully closed position.
Insert the coach screws and secure the floor bracket to the floor .

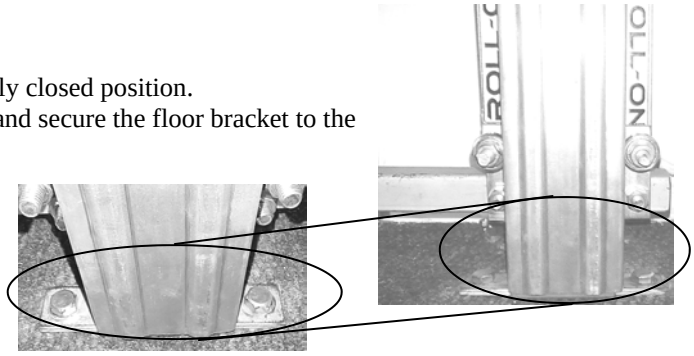

<u>Ensure that the door runs smoothly from the fully closed position to the fully open position</u>.

TIP — UP DOOR

<u>NOTE ON TIP—UP DOORS</u>
<u>Some tip-up doors can NOT be automated.</u>
<u>These include the type that use counter weights or the type that use a CAM spring mechanism.</u>

Due to the mechanics of the tip-up door it must be noted that it can be dangerous to automate this type of door. Due to the fact that the moving parts operate in a “scissors “ action this can interfere with the operators collision sensing software and can cause serious injury or damage to the operator

The mounting of the power head and attaching the channel to the wall is the same as the sectional type door. However due to the path of the door when it is opening the channel needs to be set with a downward slope. The following diagrams illustrate this.

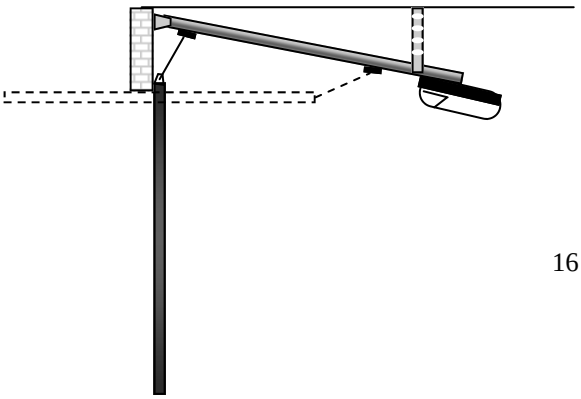

P.T.O..

Mount the door bracket on top of the door using the rivets supplied

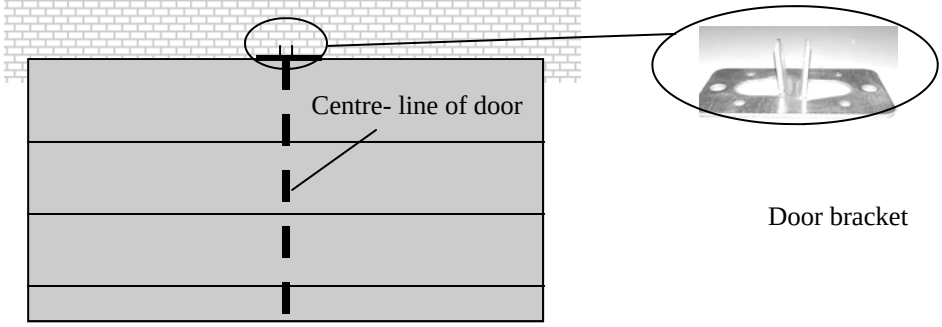

Mount the wall bracket 250—350 mm above the top of the door with the door in the closed position. The power head should be level with the door with the door in the open position

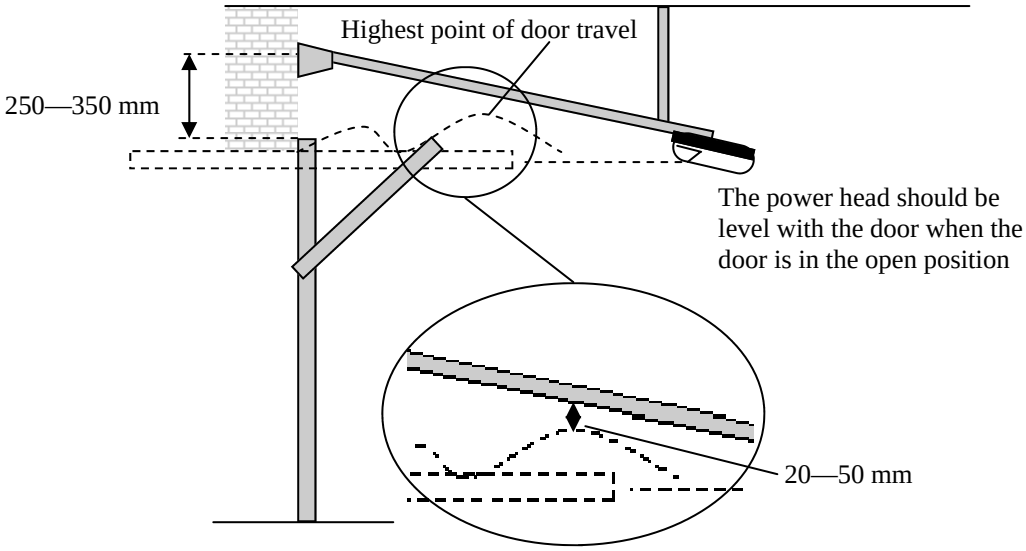

LIMITED HEADROOM INSTALLATION

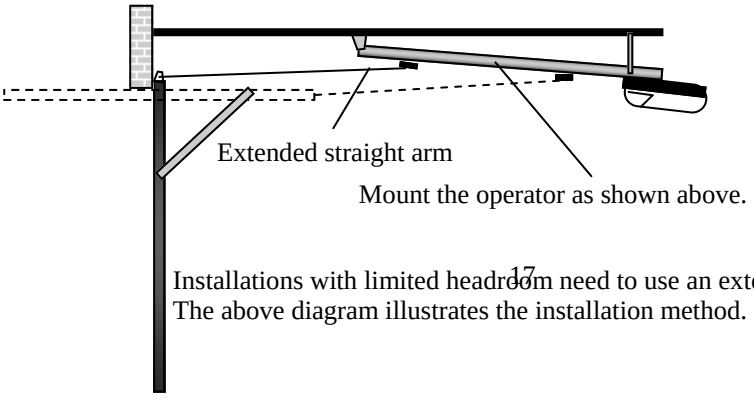

Installations with limited headroom need to use an extended straight arm . The above diagram illustrates the installation method.

CONNECTING AND ATTACHING THE BATTERY

Attach the battery to the power head using the two “Z “battery brackets and bolts supplied.

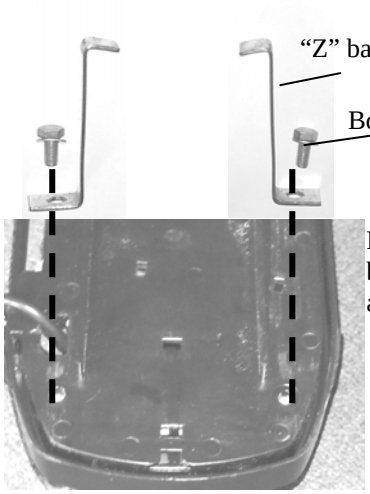

The *LAZER* garage door operator has a battery back-up system. This system allows the operator to function during a power failure. The system will automatically switch over to battery power when the mains power fails.

Connect the **red** wire from the battery to the **red** wire from the PC Board.
Connect the **black** wire from the battery to the **black** wire from the PC Board.

Incorrect connection of the battery will cause damage to the PC Board.

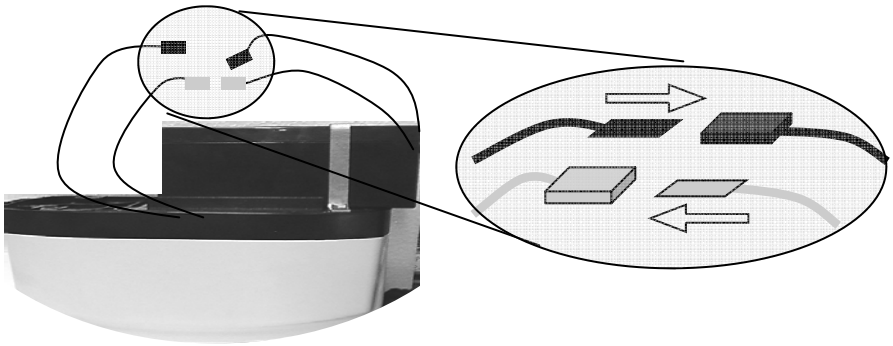

PROGRAMMING THE OPERATOR

There are two methods of programming the operator:

1. Using the Control Card
2. Using the Wall Console

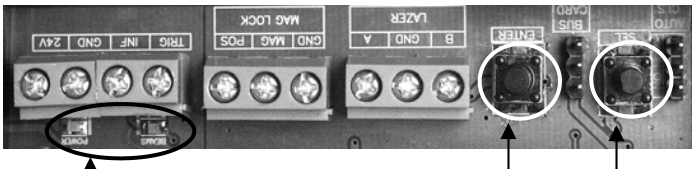

- ***LEDS***
- ***ENTER button***
- ***SEL button (****select)*

The operator needs to be programmed to each specific door. This operator uses obstacle sensing in order to detect the limits of the door, it is therefore extremely important to set the end stoppers before programming begins. Failure to do this can cause severe damage to the door. Before programming ensure that the following points are checked:

- *All locking devices on the door have been removed or made inoperable.*
- *The manual release mechanism is engaged.*
- *The door path is clear.*

NOTE : The battery must be connected before programming begins.
If no back-up battery is to be used, proceed to the steps below.

1. Switch on the mains power supply — the LEDs will illuminate.
2. Press the “SEL” (SELECT) button — the LCD will read “program mode press enter button”
3. Press the “ENTER” button

*The door will now **automatically**:*

- *Close until it reaches the end stopper.*
- *Open until it reaches the end stopper.*
- *Close to the fully closed position.*

Programming is now complete.

The LCD gives a step by step explanation while the door is programming.

To program the operator using the wall consol.

1. Press the Light button and the lock button simultaneously.
2. The LCD will indicate “program mode press enter button”.
3. Press the enter button.

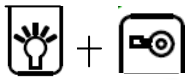

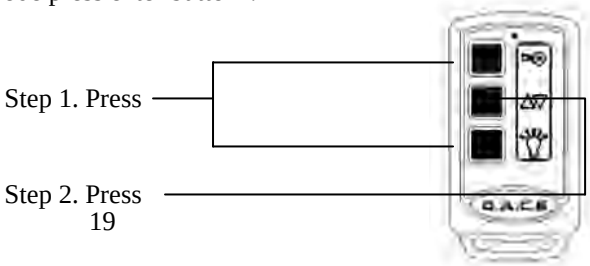

PROGRAMMING REMOTE CONTROLS TO THE OPERATOR

Note: *the operating range of the remotes is reduced in order to reduce the risk of accidental operation of the door.*

1. Press the "***SEL***" (select) button ***THREE TIMES*** (or until the LCD screen reads " press and hold enter button to learn remote")
2. Press and hold the "***ENTER***" button and press the remote button of the remote being programmed once.
3. Release the "***ENTER***" button.
4. The remote is now programmed to the operator.
5. Repeat the above steps for any additional remote to be programmed to the operator.

ERASING REMOTE CONTROLS FROM THE OPERATOR

Note: *when erasing a remote control from the operator ALL remotes programmed onto that operator will be erased. These can, however, be reprogrammed if the actual remote is available.*

1. Press the "***SEL***" button ***FOUR TIMES*** (or until the LCD screen reads " press and hold enter button to erase remotes")
2. Press and hold the "**ENTER**" button for 3 seconds (the LCD screen will show a count down)
3. All remotes are now erased from the operator.

OBSTACLE SENSING

The operator has built-in anti-crush detection software. This is to minimise injury or damage should the door close onto a person or object.
If the door does close onto an object the software will detect the extra force and the door will stop and then ***REOPEN*** automatically. If the door is opening and it hits an object, the door will ***STOP***.
It must be noted that the operator may act in the same manner if the door becomes unbalanced or the spring tension is not set correctly.

It is important to perform an ***OBSTACLE SENSING TEST****. This test should be done after the operator is programmed. To do the test, place a solid object i.e. a piece of wood that is ± 35-40 cm high, on the floor where the door will close onto the object. Trigger the door closed and when it makes contact with the object it must reopen automatically.*

This test should be carried out after the initial programming of the operator and should be repeated on a regular basis. If the operator does not perform correctly during the test, it must be inspected and repaired.

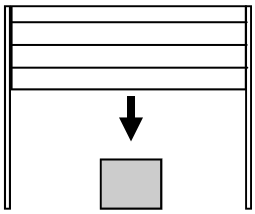

Solid object on floor

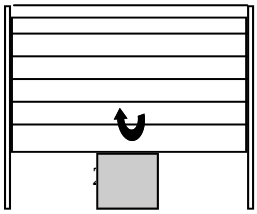

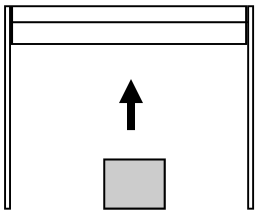

Door must hit object and then reverse open automatically

WALL CONSOLE

The programming of the wall console is carried out in the same way as the remotes. The wall console only requires one button to be programmed, the other buttons will programme automatically at the same time.

The Wall Console has FOUR functions:

1. ***LOCKOUT:*** this function allows the door to be locked in any chosen position (open or closed) and thereafter the door cannot be operated by any other remote control. Lockout is used when the door must remain closed regardless of someone attempting to trigger the door. Also used to ensure that the door stays open (e.g. when working near the door to avoid the unintentional closing of the door). To disengage Lockout press the Lockout button on the wall console or the SEL button on the operator. ***Note:*** if Lockout is active and a trigger is received then the Courtesy Light will flash 4 times to indicate the Lockout status.
2. ***COURTESY LIGHT ON/OFF:*** this function allows for the courtesy light to be switched on or off at any time. ***The light will switch off after 4 minutes***.
3. ***NORMAL OPEN/CLOSE TRIGGER:*** this function allows for the door to be triggered open or closed. ***This function will not work when the door is in holiday lockout***.
4. ***PROGRAMMING THE OPERATOR:*** press the LOCKOUT and LIGHT buttons simultaneously. The LCD will read "program mode". Press the TRIGGER button. .

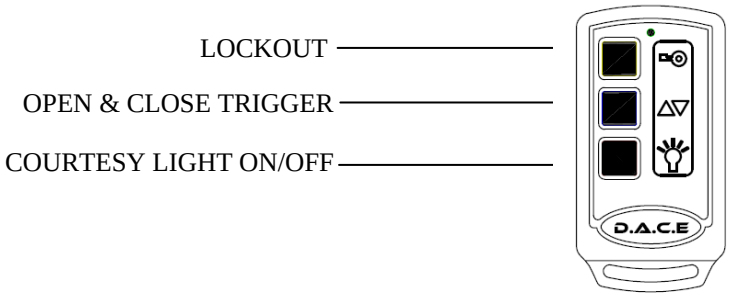

CONNECTING AN EXTERNAL RECEIVER TO THE OPERATOR (OPTIONAL)

It is possible to connect an *EXTERNAL* receiver to the operator. See wiring diagram below:

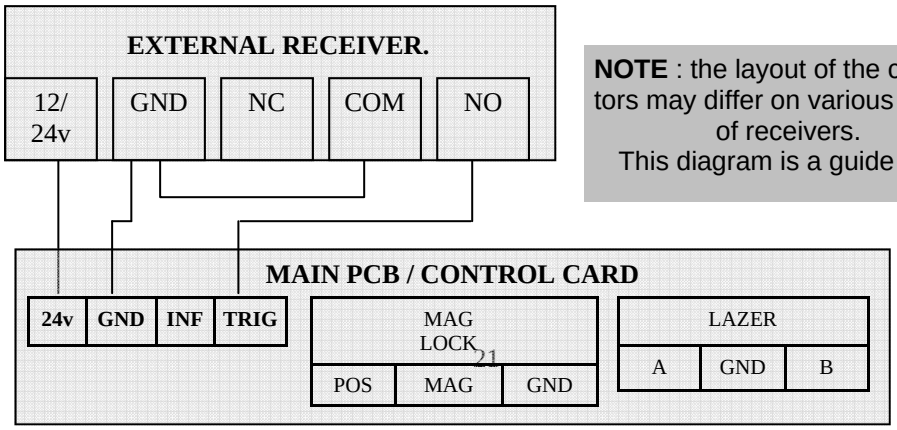

NOTE : the layout of the connectors may differ on various brands of receivers.
This diagram is a guide only.

LASER PARK ASSIST (OPTIONAL)

The operator has a Laser Park Assist facility which is an optional extra feature and is unique to the *LAZER* operator. This feature uses a laser light to assist with the parking of one's vehicle within the confines of a garage, a function traditionally filled by a tennis ball and string.
The laser is a Class 1 type: this means that it is safe to use and cannot emit a hazardous level of optical radiation. The laser power output is 0.35 mw at 640-660 nm.

A laser can cause harm/damage to a person or equipment!
Always practice extreme caution and NEVER look directly into ANY laser beam as this can cause eye injury

The laser will switch on when the door is fully open and will emit a bright red "spot" onto the vehicle. The laser will switch off after 4 minutes In the case of a double garage, two lasers can be installed. To set the laser to the correct position the vehicle has to be in the garage in the required position. Now adjust the laser so that it shines onto a spot on the vehicle that can be clearly seen by the driver. The driver then simply drives into the garage until the laser shines onto the same spot. This ensures that the vehicle is parked in the same position every time.

NOTE: *Laser Park Assist DOES NOT provide a substitute for safe parking practices.*

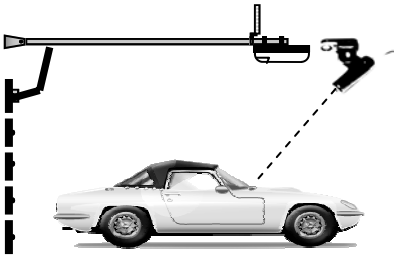

Laser set to shine on the dash of vehicle. This can be set as required.

WIRING THE LASER TO THE OPERATOR

This is the setup for a double garage configuration. If setting a single garage either A or B can be used.

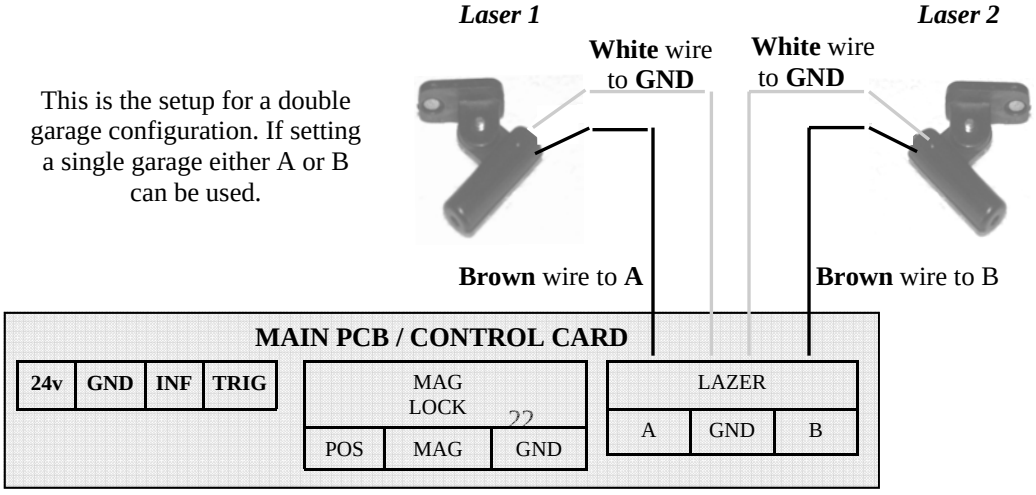

CONNECTING A MAGNETIC LOCK TO THE DOOR (OPTIONAL)

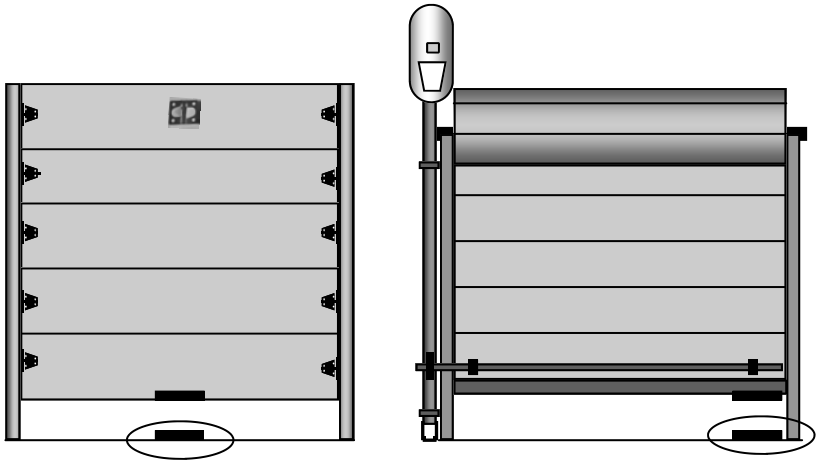

Magnetic lock position for Sectional Magnetic lock position for Roll-up

MAGNETIC LOCK WIRING

Use a LIGHT LOCK board (this is an optional extra) to connect the magnetic lock to the operator.

***NOTE:** magnetic locks must have a separate power supply.*
***Do not** use the operators power supply.*

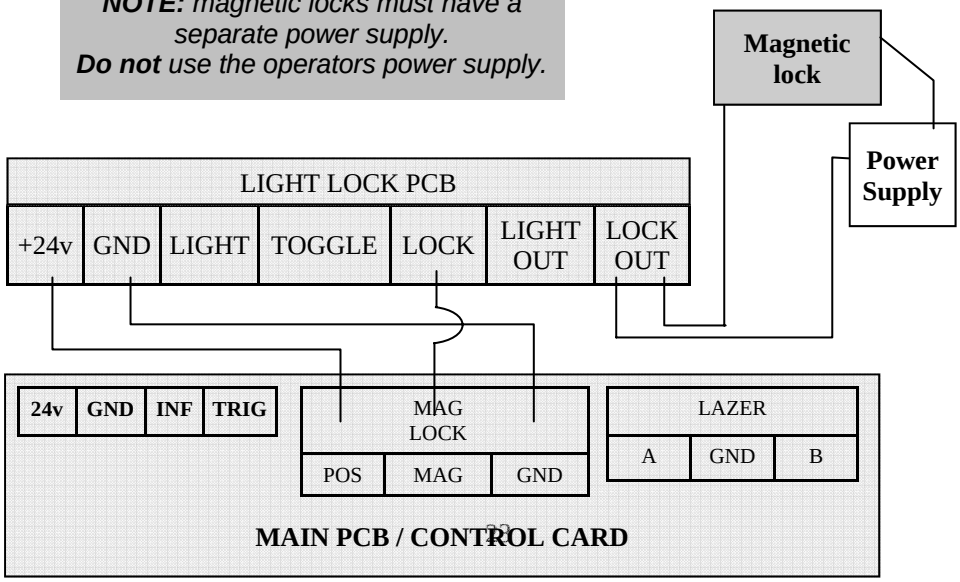

CONNECTING INFRARED SAFETY BEAMS (OPTIONAL)

This operator has Infrared Safety Beam facility. While Safety Beams are an optional extra it is ***HIGHLY ADVISABLE*** *that Infrared Safety Beams are connected in order to automatically stop the door in the event of an obstruction being present in the door's path while the door is closing.*

NOTE: *The Auto Close function will only activate once Infrared Safety Beams have been connected.*

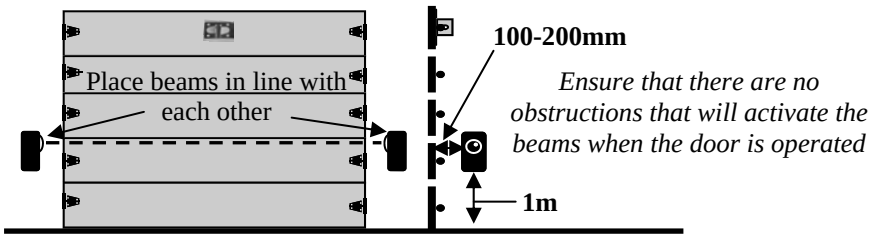

WIRING INFRARED SAFETY BEAMS

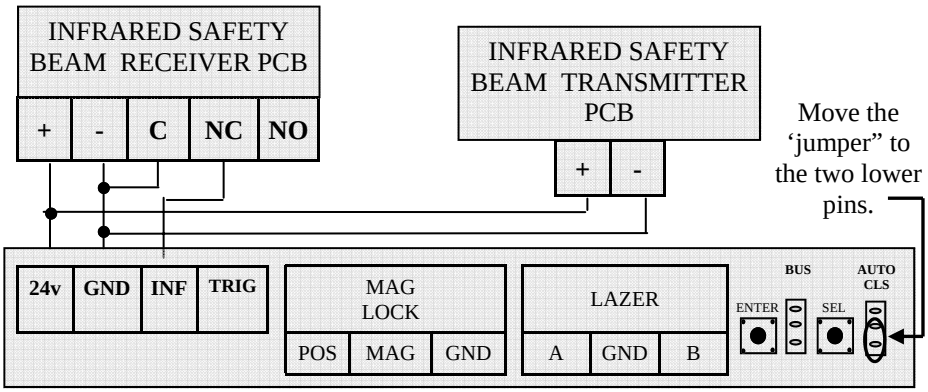

SETTING AUTO CLOSE TIME

The Auto close time delay can be set at anywhere between 20 and to 180 seconds.

1. Ensure that the Infrared Safety Beams are connected and working.
2. Move the jumper from the two upper pins to the two lower pins on the AUTO CLS connector. (As shown)
3. Press the SEL button until the screen reads "PRESS ENTER BUTTON TO SET AUTO-CLOSE".
4. Press the enter button until the chosen time delay for Auto Close is shown on the screen.
5. The auto close is now set.

Note: After auto close has been selected the screen will read "AUTO-CLOSE ACTIVE" when the door is open.

The courtesy light will flash for three seconds before the door closes, this is to warn of the immanent door closure.

To remove auto close*: press SEL button until the screen reads' PRESS ENTER BUTTON TO SET AUTO-CLOSE".* ***Move the jumper back to the two upper pins!***

LCD SCREEN MESSAGES

The LCD screen displays various messages, some of which provide instruction during the setup processes and some are descriptive and self explanatory. This list provides a list of some of the messages which require action to be taken by the user.

NOTE: *In certain conditions the courtesy light will flash to draw attention to the LCD message that is being displayed.*

MESSAGE	MEANING	ACTION
Mains fail	The mains power is off . If battery backup has been installed then the operator will continue to function until the battery goes flat.	Check plug, cable and mains power supply to ensure that the supply is resumed.
Remote battery low	The remote control battery power is low	Change remote control battery.
Obstruction check rail, rollers & rev counter	The door has encountered an obstruction or has jammed.	Check the path of the door for any obstruction if not then call a qualified door technician
Increase door spring force	The door is not balanced	Call a door technician to remedy the fault before permanent damage occurs.
Decrease door spring force	The door is not balanced	Call a door technician to remedy the fault before permanent damage occurs.
Lockout	The door is in lockout mode	When lockout it no longer required press wall console button or SEL button
Beams blocked	The infrared safety beams are obstructed or faulty.	Check for an obstruction between the beams. If there are no safety beams in place, check that the jumper is in place on the PC Board / control card.
Service due	Based on the use of the door it is now due a service.	Call a technician to service the door to ensure optimum use of the operator. Check spring force, door guide rails etc. Technician must reset the counter with his Digital Business Card and check operator battery.
No rev pulses	Indicates an electronic fault	Call a technician
Low battery	Operator battery power is low.	Check mains power supply as per “mains fail”.

TECHNICAL SPECIFICATIONS

Application:	Domestic
Maximum number of operations:	20 per day
Input Voltage:	230V AC @ 50 HZ
Motor Voltage:	24 Volt DC
Lifting Force:	1200N
Speed:	12.5cm / second
Maximum Door Size:	12m²
Battery *(optional)*:	24 Volt DC

D.A.C.E prides themselves in providing quality and technologically advanced products. As a result D.A.C.E reserves the right to make changes to their products without prior notice. Images in the instruction manual may therefore differ from the actual product supplied.

WARRANTY

The warranty covers the ***original*** purchaser, at the point of sale.

Any warranty claim ***must*** be accompanied by the ***original*** invoice.

The original purchaser is responsible for checking that the equipment is free from any visible defects before it leaves the point of sale.

The warranty period is ***12 months*** from ***date of purchase***.

The warranty is a ***"carry in***" warranty. ***No*** warranty claim will be entered into ***"on site".***

The equipment must be returned to the factory with the original invoice for any repair or replacement. The **transport** cost is for the end **users account**.

If the equipment was purchased at a dealer, merchant or agent of D.A.C.E then the claim must be directed to said supplier.

The warranty will ***not cover*** any of the following:

- Incorrect installation of the equipment.
- Incorrect wiring of the equipment.
- Lightning, flooding, power surges, fire or any form of abnormal use of the equipment.
- Any repairs carried out by a person not authorized by D.A.C.E.
- Any replacement parts used that are not authorized or tested by D.A.C.E.

LAZER

A PRODUCT OF

D.A.C.E

www.dace.co.za